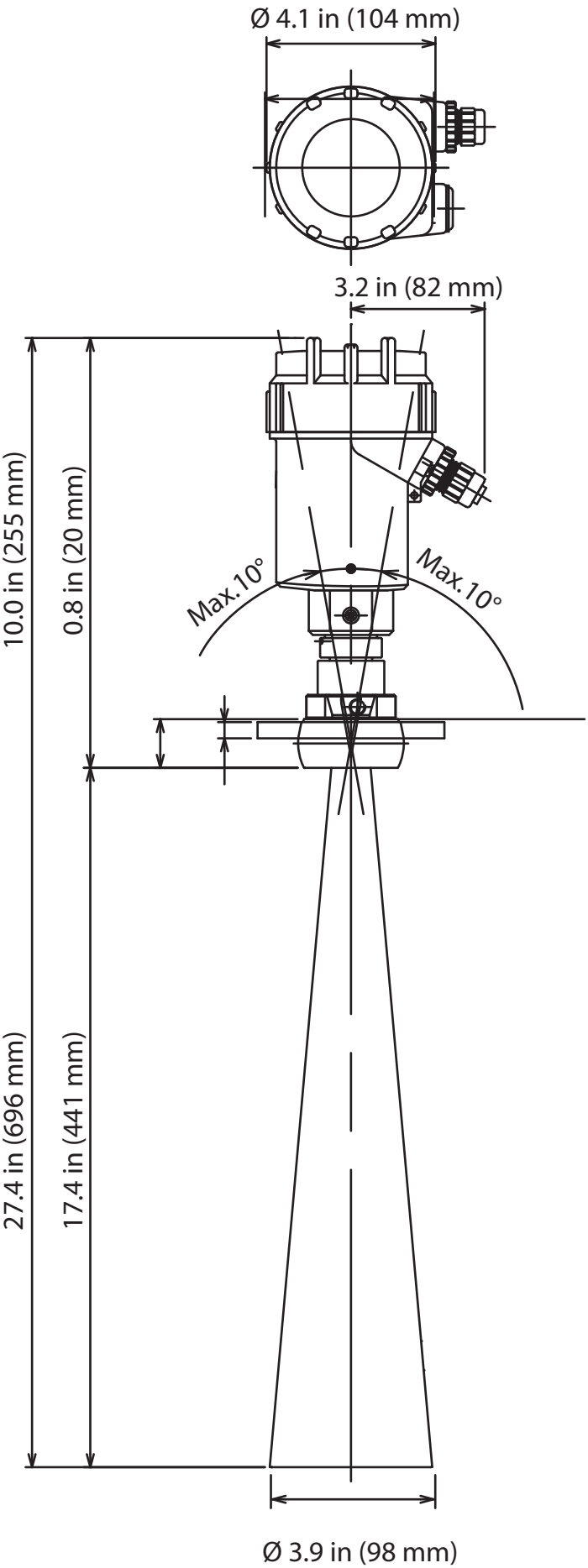
Ø 4.1 in (104 mm)
3.2 in (82 mm)
10.0 in (255 mm)
0.8 in (20 mm)
Max.10°
Max.10°
27.4 in (696 mm)
17.4 in (441 mm)
Ø 3.9 in (98 mm)